vinyl plus

COMMITTED TO
SUSTAINABLE DEVELOPMENT

CLOSING THE LOOP WITH PVC

Content

Editorial 1

Case studies
- Case 1: High performance fun and games 2
- Case 2: Sitting on sustainable innovation 4
- Case 3: Bees' know-how to treat water 5
- Case 4: Recycling investment and technology that pay off 6
- Case 5: Driving resource efficiency 8
- Case 6: Reduce-Reuse-Recycle 9
- Case 7: Building a sustainable Europe 10
- Case 8: Catering to the public procurement sector 11
- Case 9: A holistic approach 12
- Case 10: Large diameters to overcome large challenges 14
- Case 11: Relaxing in style 15

Getting the most out of VinylPlus 16

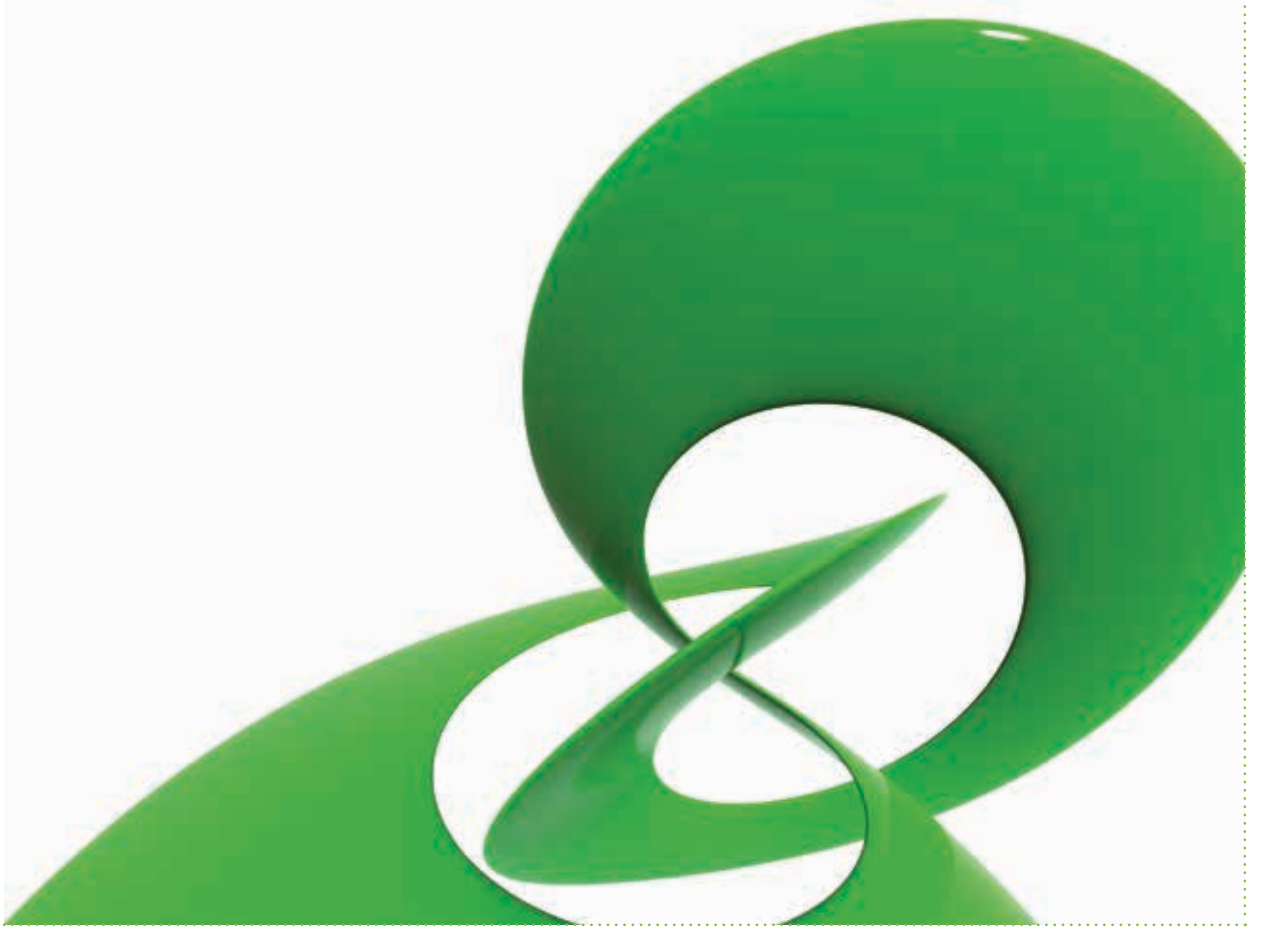

> ***Legislation is not necessarily the best answer in every situation. Here is a perfect example of an industry doing something on a voluntary basis to act in the interest of, not only themselves or the consumer, but the European Union as a whole.***
>
> Member of European Parliament Sajjad Karim, Conservatives, United Kingdom - Vinyl 2010 Monitoring Committee Member

VinylPlus is the renewed ten-year Voluntary Commitment to sustainable development of the European PVC industry. Launched in 2011, the programme has been developed in an open process of stakeholder dialogue with industry, NGOs, regulators, public representatives and users. Five key challenges have been identified based on The Natural Step System Conditions[1] for a Sustainable Society on recovery and recycling, emissions reduction, sustainable use of additives, energy efficiency and sustainability awareness. The regional scope of the programme is the EU-27 plus Norway and Switzerland (www.vinylplus.eu).

Vinyl 2010 was a 10-year programme launched in the year 2000 to move the PVC industry towards sustainability by minimising the environmental impact of production, promoting responsible use of additives, supporting collection and recycling schemes, and encouraging social dialogue amongst all of the industry's stakeholders. Over this period, reporting annually and overseen by an independent Monitoring Committee, Vinyl 2010 succeeded in meeting its performance targets. Almost a million tonnes of PVC waste had been recycled by the time the programme came to an end in 2010.

One of the objectives of the VinylPlus Voluntary Commitment is to recycle 800,000 tonnes of PVC waste per year by 2020, including 100,000 tonnes of difficult to recycle PVC through innovative recycling technologies.

Investments in research and development have always been interlinked with PVC waste management, resulting in new recycling technologies and products of higher added value (economic or environmental). A real pull market is being developed in Europe with companies having increasingly easy access to quality recyclate certified by Recovinyl (www.recovinyl.com), the organisation set up in 2003 by Vinyl 2010 to ensure a steady supply of post-consumer PVC waste for recycling in Europe.

According to the principles of a circular economy described in the European Union's roadmap to a Resource Efficient Europe and the Sustainable Consumption and Production Action Plan, companies have to re-think and re-design their products and processes to reduce raw materials and energy consumption, extend their life-cycle, and re-use and recycle as much as possible. The PVC industry is no exception and programmes like VinylPlus are perfectly aligned to the "do-more-with-less" school of thought.

This brochure is a non-exhaustive selection of best practice examples developed within the framework of the VinylPlus programme showing that we don't just talk the talk, we also walk the walk.

1. The Natural Step Framework is an internationally recognised method for sustainability planning that integrates the science of sustainability with business decision-making. It is an openly published and peer-reviewed model promoted by the international NGO, The Natural Step, along with its network of scientists, business and community leaders. (www.thenaturalstep.org)

High performance fun and games

CASE 1

> ***Your voluntary commitment is a really important step that brings in a broader coalition than just the member states of the UN. You are not just talking you are actually doing.***
>
> Tomas A. Christensen, Senior Advisor, United Nations Office for Partnerships

Sustainability was a core component of the 2012 Olympics and a key reason for London winning the bid. Recognising the potential scale of PVC required for the Games – from membrane wraps to flooring, cabling and pipework – the London 2012 Sustainability Group engaged VinylPlus, via the British Plastics Federation, in conversations with the London authorities to define their policy on PVC.

The policy set out parameters for using PVC, including manufacturing requirements (i.e. compliance with ECVM Charter[1], freedom from heavy metals, and preference for at least 30% recycled content) as well as a take-back and re-use or recycle clause.

The objective was to stimulate the supply chain to find innovative ways to provide environmental benefits and use additives sustainably taking into account the whole life cycle of the product. The policy also recognised that there were certain functional requirements for which PVC is the most appropriate material (e.g. cabling).

Take back schemes that specified incineration, land-filling or any form of disposal that did not include recycling or re-engineering options were not acceptable. The ODA (Olympic Delivery Authority, www.gov.uk/oda) contractors approached the supply chain to procure suitable solutions.

Thanks to its participation in TexyLoop® (www.texyloop.com), a unique and operational recycling chain and its cooperation with Gymnova, VinylPlus partner Serge Ferrari (www.sergeferrari.com) met the strict ODA requirements.

Over 140,000 square meters of PVC were used at the London Olympics, mostly in applications such as:

- **Tensile fabric structures**
- **High performance sports surfaces and seating**

A very large amount of the PVC used, especially in temporary structures, has been recycled by TexyLoop, which was developed with the support of Vinyl 2010.

Altro (www.altro.co.uk) was another company able to meet the very strict criteria and became the only approved supplier of safety flooring and hygienic wall cladding to the London 2012 Games. Its adhesive-free safety flooring, which can be taken up easily post-installation for re-use or recycling, was used as a temporary surface in a large number of buildings.

1. www.pvc.org/en/p/ecvm-charter

> *There are cases where for Health and Safety reasons the only solution is a PVC based material.*
>
> from 'Learning legacy' - Olympic Delivery Authority

CASE 1

© Olympic Delivery Authority

Recycling PVC waste means not only giving a new life to a valuable resource, but also re-thinking and re-designing recycled pvc production and applications in order to obtain a higher added value in terms of technical and environmental performance.

© Olympic Delivery Authority

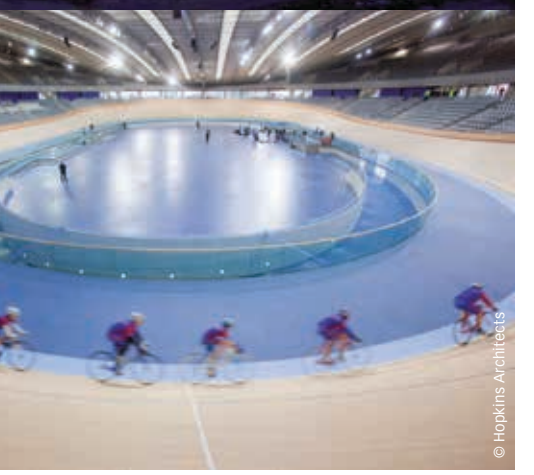

© Hopkins Architects

Sitting on sustainable innovation

> *The industry will review the use of all additives consistent with attaining full sustainability, and especially commit to progressively replace substances that can accumulate in nature or where there is reasonable doubt regarding toxic effects.*
>
> Ettore Nanni, ESPA (European Stabiliser Producers Association, www.stabilisers.org)

CASE 2

PVC recycling processes have constantly evolved and improved the recycling of a large variety of vinyl composite materials.

The high-quality, virgin-like, regenerated PVC produced by the VinyLoop® (www.vinyloop.com) recycling plant in Ferrara, Italy, is now a key component of many finished goods' eco-efficiency. A physical, solvent-based, recycling technology, VinyLoop® produces high quality R-PVC (recycled PVC) compounds.

Using VinyLoop® recycled materials, French outdoors equipment company Lafuma has created a top-quality chair. When the textile is worn down or no longer in style, it is possible to bring it back to the nearest dealer. The materials are then sent to VinyLoop® Ferrara for recycling using TexyLoop®, a process dedicated to recycle such coated textiles.

Recycled PVC granulates from the Ferrara plant can also be found in applications such as garden hoses, geo-membranes for ponds or even shoe soles. They all offer significant primary energy and water consumption savings.

The garden hose manufacturing process is based on the use of different kinds of plasticised PVC compounds. VinyLoop® has managed to use up to 90% of regenerated PVC, and the hose itself (which includes recycled PVC), is totally recyclable, significantly lowering its environmental footprint.

© Lafuma

© VinyLoop®

Bees' know-how to treat water

CASE 3

After collection and delivery by specialised companies, plastics waste can be separated and crushed to obtain raw materials.

PVC packaging waste is ground into new compounds, and used to produce drainage sheets for ground treatment.

After Hamon (www.hamon.com) has dismantled the cooling towers and removed the cray, a second company, CIFRA (www.cifra.fr), produces thermoforming recycled products such as honeycombs for water treatment following further recycling and treatment.

Hoser (www.kunststoffmatten24.de), another example, produces high-tech special boards from recycled coated fabrics, such as mats for ground stabilisation used as flooring in horse dressage and show jumping.

Similarly, post-industrial PVC/PE film waste is used to create greenhouse flooring.

© ERPA

© Hoser

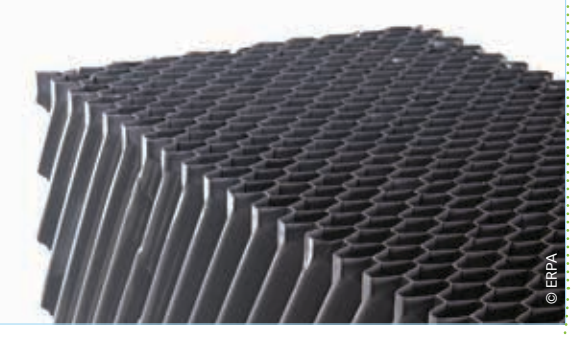

© ERPA

The European PVC industry's commitment to sustainable development and the contribution being made by our companies in supporting and financing the VinylPlus programme has been widely recognised. The progress made toward a more sustainable industry and products has been significant and concrete.

Our industry is aware of its social responsibility and of the duty that this implies. Important efforts have been made to achieve our set targets, even in these difficult economic times. Our unique mix of creativity and technological innovation, social responsibility and economic prosperity, environmental protection and resource efficiency is the best recipe for success.

Michael Träger, VinylPlus Chairman

Recycling investeme and technology that

CASE 4

The PVC industry is comfortable using recovered pre-consumer offcuts from the production process. However, it can still be challenging to find reliable, high-quality sources of post-consumer waste.

PVC Recycling Limited (www.pvcrecycling.co.uk), one of Recovinyl's longest-standing members, has been developing a process that recovers high-quality PVC powder and pellets from post-consumer PVC waste.

Recovinyl is an initiative of the European PVC industry. Its mission is to optimise the resource efficiency of the PVC industry by mediating between recyclers and converters to enable a trustworthy relationship and material flow based on a PVC recyclate certification system.

PVC Recycling Ltd Managing Directors Ian and Joanne Murray have overcome challenges along the way to prove their process and now supply recycled PVC powder and pellets to manufacturers worldwide. The technically-advanced plant has the capacity to recover in excess of 12,000 tonnes per year; with plenty of scope for expansion as the market develops.

This success attracted the attention of The North West Fund for Energy

© Ole Grondahl Hansen

© Plásticos Escanero

© Ole Grondahl Hansen

Dumping PVC in landfill takes up precious land and squanders valuable materials. As landfill is being progressively restricted in the European Union, recycling will increasingly become the principal, if not the only option for many end-of-life PVC products.

Collection, of course, is the starting point for recycling and hence it was the main focus for Recovinyl when it was created back in 2003. However, it is time for us to move beyond simply ensuring that the volumes of PVC being recycled each year increase. Going forward, Recovinyl's work will revolve around optimising the resource efficiency of the entire PVC industry by mediating between recyclers and converters to enable a trustworthy relationship and material flow based on a PVC recyclate certification system.

The final goal is to encourage the development of a 'pull market' for recycled PVC products. Only by doing so can we guarantee that recycling will help us preserve fossil fuels and land for future generations.

Eric Criel, Recovinyl General Manager

nt
pay off

> *The market needs recycling-based formulations, improved by the quality of compounds currently in use. This is what we expect to see in the next 10-15 years in terms of development.*
>
> Alexander Dangis, EuPC (European Plastics Converters, www.plasticsconverters.eu)

and the Environment, managed by 350 Investment partners, which has provided development funding to PVC Recycling. This has allowed Ian and Joanne to significantly expand their output and establish a specialist extrusion capability to help both manufacturers and users of PVC-based products benefit from the substantial margin and environmental advantages of using recycled post-consumer material.

Post-consumer recyclate performs exactly like virgin raw material for both extruders and end-users; and as a result of the firm's unique processes, it does not suffer from the visible inclusions that occur in other recycled material. It is suitable for manufacturing back into everyday products, from equestrian fencing to new PVC windows and plastic building products, such as fascias, soft fittings and guttering.

PVC-U's (unplasticised PVC) environmental credentials are impressive with research suggesting that it can actually be recycled up to seven times without losing performance[1]. PVC windows and doors have an average 35 to 40-year lifespan, so at the end of their useful lives they can potentially be turned into many new and diverse products over several centuries[2].

1. The BRE (British Research Establishment) estimates that PVC-U can be recycled up to seven times over a 200-year lifespan. In its 2008 Green Guide to Specification, the BRE has awarded PVC-u windows and cladding systems an A rating for domestic and an A+ rating for commercial properties.

2. The Building Research Establishment (BRE) Scoping Study 'Service Life' gives PVC-U a reference service life of 35 years. PVC-U profiles manufactured in accordance with BS EN 12608 are expected to last in excess of 40 years, according to the British Standards Institute (BSI).

CASE 4

> *Close cooperation between VinylPlus and the European PVC industry opens the window to the future of PVC.*
>
> Gerhard Wewior, Managing Director of Georg Fischer DEKA GmbH (www.gfps.com/deka), Switzerland, VinylPlus partner

Driving resource efficiency

CASE 5

Used in car interiors world-wide, PVC is a long-established supplier of the automotive industry.

PVC rolls from VinylPlus member Wardle Storeys (www.wardlestoreys.com), are being recycled and reprocessed in an effort to improve the overall company's resource effiency.

Improving the way their energy, water, raw materials and waste is managed helps Wardle Storeys to be more competitive, save money and demonstrate reduced environmental impact.

> ***Voluntary commitments are very often discussed within any industry, but not very often translated into reality. In Vinyl 2010/VinylPlus' journey to sustainability, it's been crucial to know where to go, to trust your partners and to remain open minded to input from outside.***
>
> Joachim Tremmel, ECPI (European Council for Plasticisers and Intermediates, www.plasticisers.org)

> ***In general VinylPlus marks an important new phase for this particular material. People in the industry now have a clear pathway for new ideas, new business opportunities, and a chance to be part of the future. Success in those areas demands that they continue to reach out to society in a more positive and solutions oriented manner. They need to foster cooperative efforts on the hot-topics rather than defending old positions. We regard VinylPlus as a clear beacon for that kind of leadership from business.***
>
> David Cook, Executive Ambassador of The Natural Step International

VinylPlus has not developed the programme on its own. We have involved an NGO, The Natural Step, which is a big experiment and also many other stakeholders from inside and outside the PVC industry.

Together we have identified 5 key challenges and about 30 different targets – although very important, recycling is just one of them – including the sustainable use of additives, incorporation of renewable materials and energy, emissions reductions, etc.

Vinyl 2010 is one of the few successful industry Voluntary Agreements in Europe. The key has been working together as a unified value chain since its launch. As our goals become more ambitious, we must be able to maintain this united front but cannot do it on our own. It is important that our work continues to be overseen by others, such as policy-makers, other industry sectors or civil society organisations, but we also need their support.

Together, we can accomplish great things.

Stefan Eingärtner,
VinylPlus Deputy General Manager

Reduce-Reuse-Recycle

© Deceuninck

© Deceuninck

CASE 6

© Deceuninck

© Deceuninck

© Deceuninck

PVC waste is a valuable raw material that should be recovered.

All the production waste of Deceuninck (www.deceuninck.be) is reprocessed into new products such as cyclefoam sound barriers made of recycled post-consumer PVC or recycled cladding with high end decorative film. The organisation also opened its own recycling centre where it organises and recycles cut-offs from window manufacturers and end of life PVC windows.

Deceuninck focuses its innovation efforts on designing and achieving the highest isolation for the lowest material consumption. Like the fiberglass reinforced Zendow#neo window that reachs 30% better insulation at 40% less weight.

> ***"The PVC industry has a great role to play in light of the current EU 2020 strategy which must be supported by three key pillars: innovation, skills and sustainability."***
>
> Gwenole Cozigou, European Union's Director of DG Enterprise, Member of the VinylPlus Monitoring Committee

Building a sustainable Europe

CASE 7

PVC is mainly used in construction and public works for window frames, pipes, fittings, flooring, cables and cladding. Within the VinylPlus programme, our partners are collectively committed to greater environmental quality of PVC, aiming to multiply three-fold the recycling volume by 2020.

Full compatibility, consistency, strength and a guarantee of optimal quality are the reasons for selecting a PVC solution in the implementation of a Charmeil construction site in France - a site dedicated to the extension of a wastewater system for a new residential area.

"For this project, which involved creating network connections 2 meters deep before connecting to the existing network - itself located 4 meters deep, the PVC solution was the choice of the public procurer", explained Raphael Alric, sanitation and water supply products manager from Wavin in France (www.wavin.com).

Le Havre in France also opted for a PVC solution when it decided to expand its tram network. The construction site called for an extension of the existing underground pipe network and Rehau PVC pipes and fittings (www.rehau.com) was a natural choice given its ease of use and resistance.

© ECVM

Do more with less. A simple yet revolutionary concept which lies at the heart of the more recent international policies aimed at promoting a genuine transition to a green economy. For the industry at large, and the PVC industry in particular, it implies a radical change in its modus operandi bringing about a continuous quest for improvements in the way its resources are obtained and transformed.

© Le Havre - STR-PVC

Catering to the public procurement sector

> *PVC windows can meet the Green Public procurement criteria, provided the bidder shall demonstrate that the production of PVC complies with best practice in accordance with VinylPlus or equivalent.*
>
> European Commission, Joint Research Centre 'Working Document' on 'Green Public Procurement for Windows and External Doors' (2012)

CASE 8

Public procurement authorities can set an influential example for industry and consumers alike whilst contributing to raising awareness about the importance of sustainable development.

In some countries public procurement professionals are legally required to take a comprehensive and measured approach when purchasing PVC products. These decisions have great impact at European, national and regional levels and hence even municipal choices can help setting the right precedent and lead by example when it comes to material choice.

In a study[1] on the 'Total Cost of Ownership' (TCO), Professor Marangoni (Bocconi University, Italy) looked at three key PVC applications - windows, pipes and flooring - taking into account all costs associated with a product over its entire life-cycle. The results showed that PVC products provide the lowest 'whole life cost' in each of the application examined. Some public bodies have conducted their own TCO studies on PVC products and alternatives reaching similar results.

In Carmarthenshire, United Kingdom, a 7-year investment and refurbishment plan by the city council (started in 2005) saw the installation of PVC-U windows, doors, fascias, soft fittings and rainwater goods for 1,620 residential properties. The municipality is also recycling up to 400 first generation PVC-U windows per week.

Also in the UK, Liverpool, the city council worked with Liverpool Mutual Homes (LMH) to install PVC-U windows with an 'A' energy rating.

LMH Project Officer Jodie Powell said residents had remarked on how the new windows have made their homes much warmer and have improved the external appearance of the properties.

As reported by the Solinger Tageblatt, the use of PVC products for door and window systems is once again permitted in the renovated or newly built municipal buildings of Solingen in Germany.

The city's Finance Committee lifted a restriction passed by the Environment Committee in 1992 and in doing so, paved the way for PVC products.

According to the City Council, the installation of PVC windows and doors leads to savings of around 70,000 euros per year in comparison to other materials. These potential savings have been highlighted by the renovation of the Geschwister-Scholl-Gesamtschule secondary school, for which the use of PVC products will save around 385,000 euros.

© Rehau

1. Visit www.pvcconstruct.org/en/p/pvc-tco

> *We have to admit that we all have a responsibility to work closely together, producers, consumers, recyclers and waste operators, and of course policy makers.*
>
> Janez Potočnik, European Commissioner for the Environment

A holistic appr

CASE 9

Through a special recycling process, non-woven, woven or textile lamination are separated from sheets made from soft PVC. Then it separates the different materials from each other to turn these into sustainable raw materials for production purposes. Their main PVC-P (plasticised PVC) products include floor screed films, insulation mats, sound absorbing foils and damp-proof wall barriers.

Caretta (www.caretta-folie.de) has chosen the path of a direct partnership with the German plastics processors' associations and industry, and together found a way to recycle plastic waste materials up to 100%.

The company's Managing Director, Patrick Fertich, decided to begin producing PVC-films from recycled PVC-P.

Approximately 2,500 tonnes of hard to separate soft PVC material, lined with fleece, woven fabric or polyester, are returned to the production cycle each year.

The plastic waste material is collected directly at the point of origin and subjected to mechanical processing. Recyclable materials clad with fleece, fabric or textiles are poured into a shredder from above and chopped into sections approximately 4 - 6 cm long. The system is geared to deliver 1,000 kg of output per hour. The shredded sections are then processed into granulate via a conveyor belt that is coupled to the volume intended for further processing. The screen used determines the grain size.

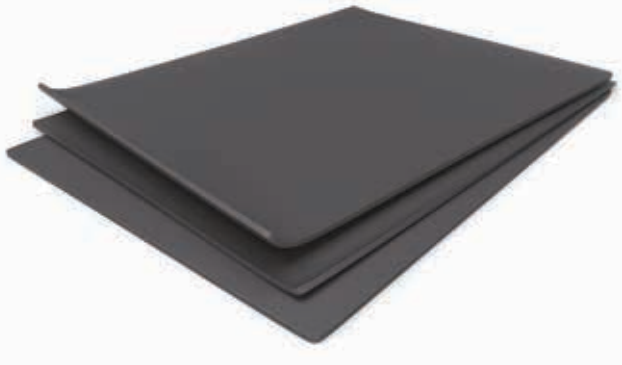

oach

> *Think about your business, think about your future – by joining together we can all contribute to support the industry that supports us and ensure we have loyal and well informed customers who remain confident in our processes & products.*
>
> Jon Skinner, Commercial Director of Epwin Window Systems Division (www.epwin.co.uk), United Kingdom, VinylPlus partner

CASE 9

> *The programme is essential for the European PVC industry in tackling the sustainability challenges for PVC. The programme brings together a wide range of companies with a common commitment - sustainable development.*
>
> Geir Vegsund, Managing Director, H-Produkter AS (www.hprodukter.no), VinylPlus partner

© Caretta

© Caretta

The United Nations Environment Programme (UNEP) defines the "circular economy" as "an economy which balances economic development with environmental and resources protection, with emphasis on the most efficient use and recycling of resources, and environmental protection". A circular economy features low energy consumption, low polluting emission and high efficiency.

Large diameters to overcome large challenges

CASE 10

Water management is a key issue in a planet expected to be home for 9 billion people by 2050.

The PVC industry is responding with innovative solutions to global megatrends, including the growing demand for water, energy and resource efficiency amid difficult economic times. Very aware of the need to address this huge challenge, the Spanish company Molecor (www.molecor.com) has developed ground-breaking technology to produce the largest PVC-O pipe in the world.

Outstanding properties such as pressure and impact resistance, hydraulic capacity, lightness and low maintenance are available in these large diameters, suitable for main networks of fresh water distribution.

The new piping is based on hot air that saves energy during the bi-orientation process. This means less energy consumption during the manufacturing of these pipes. As explained by Ignacio Muñoz, CEO of Molecor TECH, his company has also developed a system of joints between pipes ensuring the dependability of any water network.

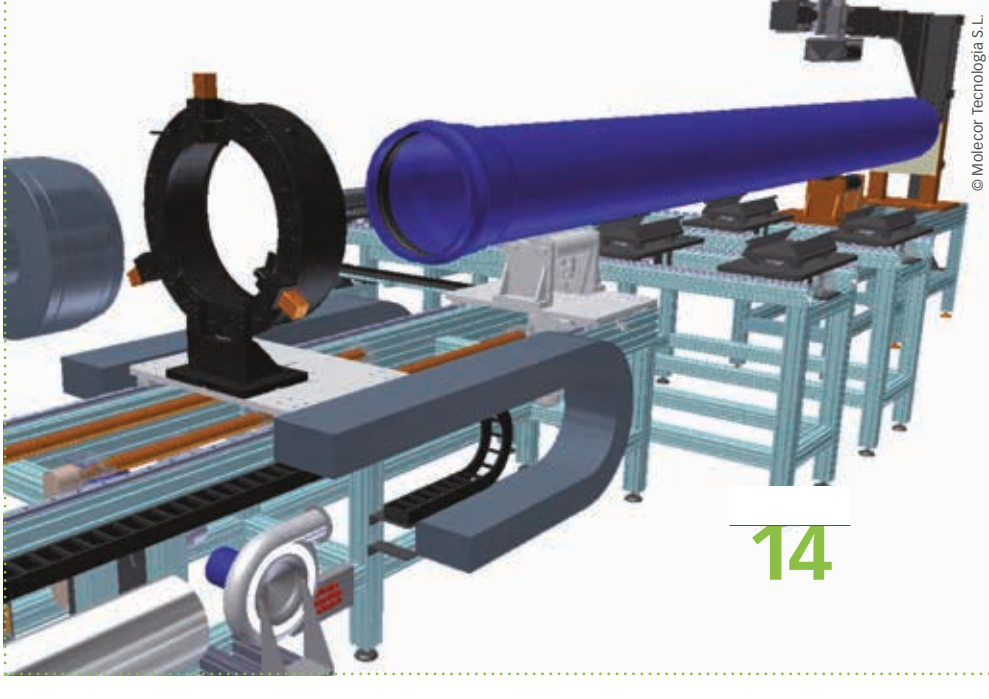

© Molecor Tecnologia S.L.

> *In the current economic situation, it will be crucial to safeguard the PVC market. If the VinylPlus Voluntary Commitment can help to make our products more sustainable it will turn into a competitive market advantage in the longer term.*
>
> Marino Uberti, Managing Director – Alfatherm (www.alfatherm.it), Italy, VinylPlus partner

Relaxing in style

© Cédric Charles

© Cédric Charles

CASE 11

Eco-design is an innovative sector full of potential to introduce the use of recyclates. Aware of PVC's potential, Swiss designer Cédric Carles (www.atelier2ce.org) conceived a chair made from extruded, calendered sheets.

His creation is a model of eco-design; it can be completely disassembled and it uses Pevetex® fabric and stainless steel tubing and screws that are completely recyclable. It's suitable for use indoors and outdoors.

This relaxing chair is made by calendering a thick PVC sheet mixed with Pevetex®, which comes from waste. The PVC textile sheet, produced by RENOLIT, is supported by fabric obtained by the densification procedure of Chaize, a Recovinyl network member. In this particular case, the PVC waste comes from end-of-life vehicle upholstery.

In VinylPlus we continue with the same motivation that led the PVC industry to launch its first sustainability programme in the year 2000. This motivation is derived from sharing the same vision with all our partners. From there you can then establish and commit to measurable targets, objectives, action plans.

The beginning of a programme like this was not easy as we had to align four different sectors representing over 21,000 companies. We needed some time to learn from each other, learn how to work together. We are a strong sector which can make a difference.

We can demonstrate that our efforts are paying off, that we can achieve our targets. But, also very importantly, there is increased recognition for our initiative from European and International bodies such as the recently joined Green Industry Platform jointly run by UNIDO (United Nations Industrial Development Organisation) and UNEP (United Nations Environment Programme). It is not just our sector; it is the entire society that is working to close the loop on sustainable development. We must keep it up!

Brigitte Dero,
ECVM (European Council of Vinyl Manufacturers, www.pvc.org) & VinylPlus General Manager

Getting the most out of VinylPlus

> *We will be able, if we work together, to give the message that this is a good material and that it should be used much more than it is today.*
>
> Carlos Sánchez-Reyes de Palacio, President, Spanish Organisation of Consumers and Users/Vinyl2010 Monitoring Committee Member

Socially responsible excellence

VinylPlus is a Club of Excellence for companies genuinely interested in getting involved in sustainability and living up to their corporate social responsibility (CSR) to make a difference.

The European Commission defines CSR as "a concept whereby companies integrate social and environmental concerns in their business operations and in their interaction with their stakeholders on a voluntary basis." Corporate social responsibility is part of the Europe 2020 strategy for smart, sustainable and inclusive growth.

VinylPlus partners can increase their company's CSR by supporting the content and principles of the VinylPlus Voluntary Commitment, sharing data on the use of recyclates and other controlled-loop information, and contributing to the overall European PVC recycling through the financing of VinylPlus.

Market recognition

Being a VinylPlus partner means showing a positive attitude toward sustainable materials and contributing to the sustainable future of our products, industry and society. You will receive an Official Membership Certificate stating that your company is committed to the contents and principles of the VinylPlus Voluntary Commitment

Business value

The VinylPlus product label for PVC products will give partner companies high visibility and helps sell sustainable products. It allows customers and specifiers to better identify products, applications and solutions that contribute to sustainable development. Consumers, industry and procurement decision-makers will then have more transparent information to enable them to make smart and sustainable choices.

Tangible projects & Results

Every converter's Euro input is multiplied. VinylPlus spends the large majority of its budget in downstream converter projects and recycling. 70% is financed by the resin and additive producers.

Interested in making your own commitment to sustainability? Join us!

VinylPlus strongly believes that the success of its initiatives depends on the direct participation of the highest possible number of companies, especially from the conversion industry and downstream users (recyclers, retailers, brand holders). This will allow VinylPlus to broaden its regional scope, increase its impact and improve its financial capabilities.

To find out more about how to become a member, visit our website, www.vinylplus.eu

vinyl plus
COMMITTED TO SUSTAINABLE DEVELOPMENT

www.vinylplus.eu

European PVC Converters contributing to VinylPlus

Austria • aluplast Austria GmbH • Dietzel GmbH • Pipelife Austria • Poloplast GmbH & Co KG • Rehau GmbH • Sattler AG • **Belgium** • Aliaxis Group • Deceuninck NV • Dyka Plastics NV • Floridienne Chimie SA • IGI - Global Wallcoverings Association • Pipelife Belgium NV • PROFIALIS NV • RENOLIT Belgium NV • Tessenderlo Chemie NV • Wavin Belgium • **Bulgaria** • **Czech republic** • Pipelife Czech S.R.O. • **Denmark** • Nordisk Wavin A/S • **Estonia** • Pipelife Eesti AS • **Finland** • KWH Pipe Oy AB • Pipelife Finland Oy • Upofloor Oy • Uponor Suomi Oy• **France** • Cifra • CTS Cousin Tessier SAS • Deceuninck SAS • Dickson Saint Clair • Forbo Sarlino SAS • Gerflor SAS • Gerflor Tarare • Girpi • Griffine Enduction • Nicoll • PROFIALIS SAS • PUM Plastiques SAS • Rehau SA • RENOLIT Ondex SAS • S.I.D.I.A.C. • Serge Ferrari SAS • SOTRA-SEPEREF SAS • Tarkett France • Veka SAS • W.R. Grace S.A. • Wavin France SAS • **Germany** • A. Kolckmann GmbH • aluplast GmbH • Alwitra • AMS Kunststofftechnik GbmH Co KG • Armstrong • BT Bautechnik Impex GmbH + Co. KG • debolon dessauer bodenbeläge GmbH&Co. KG • Doellken Kunststoffverarbeitung GmbH • Elbtal • FDT FlachdachTechnologie GmbH & Co. KG • Gealan Fenster Systeme GmbH • Georg FIscher Deka GmbH • Gerflor Mipolam GmbH • Heubach GmbH • Heytex Bramsche • Heytex Neugersdorf GmbH • IKA GmbH KG • Inoutic/Deceuninck GmbH • Klockner Pentaplast GmbH Co. KG • Konrad Hornschuh AG • Marley Deutschland • Mehler Texnologies GmbH • MKF-Folien GMBH • MWK Kunststoffverarbeitungs GmbH • Pipelife Deutschland GmbH • Polymer-Chemie GmbH • Profine GmbH • REHAU AG+Co • RENOLIT SE • Roechling Engeneering Plastics KG • Salamander Industrie Produkte GmbH • Schuco International KG • Sika Trocal GmbH • Tarkett Holding GmbH • Tonsmeier Kunststoffe GmbH & Co. KG • Veka AG • Verseidag-Indutex GmbH • Wavin Gmbh • **Greece** • Pipelife Hellas S.A. • **Hungary** • BTH Fitting kft • Marley Hungaria • Paccor Hungary • Pipelife Hungaria • Wavin Hungary • **Ireland** • Gernord Ltd • Wavin Ireland • **Italy** • Alfatherm S.p.A • Finstral AG • FIP • Flag SPA • Gallazzi SPA • Mondoplastico • Nicoll Italy • Redi • RENOLIT Milano S.r.l. • Solvay Italy • Vulcaflex • Latvia • **Lithuania** • Wavin Baltic • **Luxembourg** • Tarkett GDL SA • **Netherlands** • Dyka NV • Forbo Coral NV • Forbo-Novilon BV • NYLOPLAST EUROPE B.V. • Pipelife Nederland BV • RENOLIT Nederland BV • Vescom BV • Wavin BV • Wavin Nederland BV • **Norway** • H Produkter AS • Norsk Wavin • Protan AS • **Poland** • CTS-TCT Polska Sp. z.o.o. • Dyka Polska Sp. z.o.o. • Ergis Eurofilms SA • Inoutic/ Deceuninck Sp.z.o.o. • MKF-Ergis Sp. z.o.o. • Pipelife Polska SA • Poliplast • REHAU Sp. z.o.o. • Veka Polska • Wavin Metalplast • **Portugal** • TMG • **Romania** • **Slovenia** • Juteks d.o.o. • **Spain** • BM, S.L. • Jimten • Manufacturas JBA • Molecor • REHAU Industrias S.A. • RENOLIT Hispania SA • RENOLIT Iberica SA • Riuvert • Veka Iberica • **Sweden** • Pipelife Sverige AB • Tarkett AB • **Switzerland** • Forbo Giubiasco SA • Omya International AG • Perlen Packaging • Sika Manufacturing AG • **United Kingdom** • Altro • Amtico • Deceuninck Ltd • DHM • Epwin Window Systems • Eurocell Profiles Ltd • Forbo Flooring UK Ltd • Polyflor • REHAU Ltd • RENOLIT Cramlington Ltd • Tarkett Limited • Veka Plc • Wardle Storeys • Wavin Plastics Ltd

PVC producers supporting VinylPlus

INEOS ChlorVinyls (Belgium, France, Germany, UK, Netherlands, Norway, Sweden) • Shin-Etsu PVC (Netherlands, Portugal) • SolVin (Belgium, France, Germany, Spain) • Vestolit GmbH & Co. KG (Germany) • Vinnolit GmbH & Co. KG (Germany, UK)

Stabilisers producers supporting VinylPlus

Akcros Chemicals • Akdeniz Kimya A.S. • Asua Products SA • Baerlocher GmbH • Chemson Polymer-Additive AG • Floridienne Chimie • Galata Chemicals • IKA GmbH & Co. KG • Lamberti Spa • PMC Group • Reagens Spa

Plasticisers producers supporting VinylPlus

BASF SE • Evonik Industries AG • ExxonMobil Chemical Europe Inc. • Perstorp Oxo AB

vinyl plus

COMMITTED TO
SUSTAINABLE DEVELOPMENT

Avenue E Van Nieuwenhuyse 4/3, B-1160 Brussels, Belgium
Tel. +32 (0)2 676 74 45

www.vinylplus.eu